Complete Train Control
Run Your Trains, Not Your Track!

PM42

All Scales

Power Manager For 4 Independent Power Sub-Districts

Short Circuit Management or Auto Reversing

Features

- Cost effective power management for 4 power sub-districts.
- Short circuit management or auto-reversing for each sub-district.
- Short circuit management increases layout reliability by preempting booster shutdown when a short circuit is detected by the PM42. This minimizes disruptions to operations by automatically restarting layout operation when the short circuit is cleared.
- User selectable short circuit detection sensitivity lets you adjust the PM42 to optimize operation with other equipment on your layout.
- Auto-reversing manages polarity mismatches on reversing track sections.
- Trains move through reversing sections on your layout automatically, without manually throwing electrical toggle switches or adding another booster.
- Connect your PM42 to LocoNet & transmit information to your LocoNet system.
- No locomotive wiring modifications needed.
- An external power supply is needed to run the PM42 (12-18V AC or DC 125mA minimum output). Digitrax PS14 power supply is sold separately

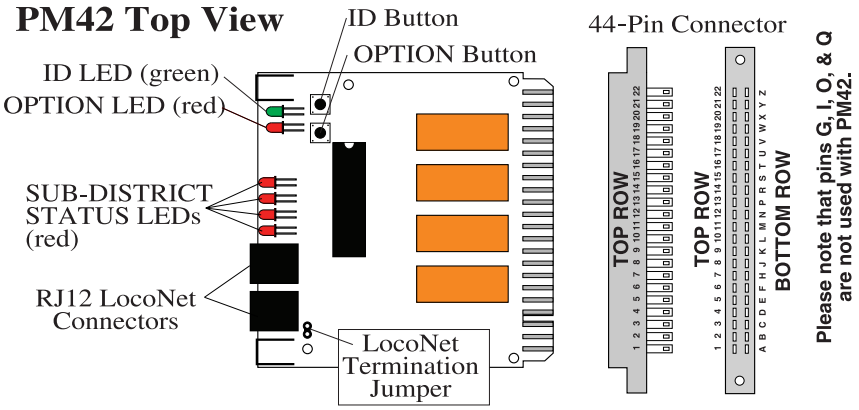

©2010 Digitrax, Inc.

PM42 Power Manager
Instruction Manual

Table of Contents

1.0 Introduction	2
2.0 Terminology	2
3.0 PM42 Operation	2
3.1 Short Circuit Management	2
3.2 Auto-Reversing	3
4.0 PM42 Wiring	4
5.0 PM42 Option Switch (OpSw) Set Up	9
5.1 PM42 Trip Current	10
5.2 Setting the Short Circuit Sensitivity of the PM42	11
5.3 Setting the PM42 for Auto-Reversing Operation	12
6.0 Using your PM42 on LocoNet	12
6.1 Setting the PM42's board address:	12
7.0 Troubleshooting	13
8.0 Warranty and Repair Information	14
9.0 FCC Information	14

Digitrax Manuals & Instructions are updated periodically.
Please visit www.digitrax.com for the latest version of all manuals.

Digitrax, LocoNet, Super Empire Builder, Super Chief, Zephyr, Radio Equipped, AutoReversing, FX, UniVersal Consisting, Jump, and others are trademarks of Digitrax, Inc.

Digitrax, Inc. is not responsible for unintentional errors or omissions in this document.

This manual is copyright Digitrax, Inc. 2004-2010
Printed in USA All Rights Reserved REV 12/2009

1.0 Introduction

The PM42 can control 4 independent power sub-districts that can each be set up as either a "Short Circuit Manager" (default) or an "Auto-Reversing Controller." Each of the 4 sub-districts can be set for slow, regular, faster or fastest short circuit management depending on the needs of the user. A separate booster can power each of these sub-districts or multiple boosters can power any combination. Each PM42 requires a 12 to 18V AC or DC 125mA power supply (sold separately such as Digitrax PS14). One power supply (125mA per PM42) can power more than one PM42 as long as it provides 125mA per PM42 and is not used to power any other device. DO NOT share a power supply between your PM42 and any command station or booster on the layout. **Digitrax does not recommend sharing a power supply between one or more PM42s and any other device on the layout.**

Analog operation or zero stretching will adversely affect booster or PM42 detection times for auto-reversing and short circuit detection.

2.0 Terminology

Power District or District: The power wiring, components and equipment attached to that wiring that are driven from a single properly isolated booster. In the case of the PM42 a district is a part of the layout that is double gapped at both ends and powered by a single booster.

Sub-district: A subdivision of a district. With one PM42, you can create 4 sub-districts. These 4 sub-districts can all be within one district powered by one booster or they can be spread over more than one district.

Section: One fourth of a PM42. Each PM42 is divided into 4 sections. We call these Section 1, Section 2, Section 3, and Section 4. Each section of a PM42 can be set up either for short circuit management or auto-reversing.

3.0 PM42 Operation

3.1 Short Circuit Management

When the PM42 detects a short circuit, it will shut down the sub-district where the short occurs. The "SUB-DISTRICT STATUS" LED for the sub-district with the short circuit will light red. The other sub-districts will continue to operate. PM42 reconnection or automatic restart attempts may cause brief power interruptions to the booster output if the short circuit is not cleared.

The PM42 offers four settings for short circuit detection sensitivity. These four settings let you optimize your PM42 for operation with other equipment you use on your layout.

When a short circuit occurs on any layout, the voltage at the booster will collapse. The purpose of the PM42 is to preempt the booster shutdown to minimize disruptions to layout operations by automatically re-starting the layout when this happens. In most cases, you will not notice any power interruption in the operation of DCC equipped locomotives. This is because most DCC decoders store energy to keep their CPUs alive in case of brief power interruptions and the inertia of a moving locos will usually keep it moving as long as the short does not last too long. Because power storage characteristics vary from decoder to decoder, some are more sensitive to short circuits than others. To compensate for more sensitive decoders, the PM42 can be set for faster or fastest short circuit detection. Slower short circuit detection may be a better choice if you are running locos with lots of incandescent lamps or lighted passenger cars because when you turn these on, there is a brief current spike that may be indistinguishable from a short circuit to the system.

3.2 Auto-Reversing

When a train enters a PM42 reverse section sub-district that is set up for "Auto-Reversing" and there is a polarity mis-match, the PM42 will automatically change the polarity of that sub-district and the train will continue to run through the reversing track section. The "SUB-DISTRICT STATUS" LED for that sub-district will light red or go off, depending on the polarity needed to correct the auto-reversing polarity mis-match.

When auto-reversing occurs on the layout the direction of travel of non decoder equipped or "conventional" locos **WILL** be affected depending on where they are on the layout and on which part of the track has its polarity reversed to allow for auto-reversing. **We recommend that analog locos not be run on any layout that is using auto-reversing because they may suddenly change direction when track polarity is changed by the auto-reversing feature.**

Since the PM42 operates "downstream" of the Digitrax boosters it is constrained by the operating characteristics of the boosters; i.e. the current available during a short circuit and the timing setup of the boosters. A correctly wired and configured PM42 will operate before booster fault shutdown and disconnect any load detected as a "short circuit". The PM42 will automatically attempt to reconnect any short circuit detected until the short circuit is cleared.

4.0 PM42 Wiring

(See **TABLES I &II** and ***Diagrams 1 & 2***)

1. Before installing the PM42 on your layout, be sure that your boosters shut down correctly when a short circuit occurs. To do this, short the track in each power district. Use a coin or screwdriver blade across the tracks in several locations within the district to create a short circuit. The booster in the shorted district should beep and shut down each time you short the track, the other boosters and districts will continue to run. Once the short is cleared, the booster that was shorted should automatically resume operation. If the booster does not shut down as described, then more or heavier feeder wires or bus wires may be necessary to correct this.
2. Connect the wires from the booster's Rail A & Rail B outputs to the Rail A & Rail B inputs for one section of the PM42 that will be powered by that booster. (See **TABLES I & II** for connection details for each PM42 section). You can use a different booster to drive each of the PM42's four sections if desired.
3. Wire at least one of the PM42's ground connections (Pin B or X) to the Digitrax booster ground, common (or case) of the boosters.
4. Wire the PM42's Track Outputs A&B to the A&B rails of the track to be controlled.
5. To make a PM42 section "AutoReversing" first, connect the "REV" pins and adjacent "TRACK OUTPUT" pins on the 44 -pin connector for that PM42 section as shown in ***Diagrams 1 & 2***. Then, set the related op switch (OpSw) for Auto-reversing. (See **TABLE III** for OpSw number). See Section 5.0 PM42 OpSw Set Up.
6. Connect a 12-18V AC or DC power supply to the AC1 (Pin 3) and AC2 (Pin C) terminals of the 44-pin connector. This powers the PM42(s). Multiple PM42s can be supplied by a single power supply as long as you provide 125mA for each PM42. This supply should not power or be shared by any devices other than PM42s.

Tracks should be double gapped between adjacent power districts.

Be sure the 44-pin connector is plugged in to the PM42 with the numbered pin labels on the component side of the board. (See PM42 Top View on Front Cover of this manual).

TABLE I: PM42 44-pin Connector
PC Board Component Side Connections

	PIN	Name	Connect To
	1		Do Not Connect
	2		Do Not Connect
	3	AC1	AC or DC 12-18V Power Supply
PM42 Section 1	4	RAIL A	Rail A connection to booster for PM42 Section 1
	5	REV A*	To make PM42 Section 1 Auto-reversing connect to pin E, Set OpSw 06=c
	6	REV B*	To make PM42 Section 1 Auto-reversing, connect to pin F, Set OpSw 06=c
	7	RAIL B	Rail B connection to booster for PM42 Section 1
PM42 Section 2	8	RAIL A	Rail A connection to booster for PM42 Section 2
	9	REV A*	To make PM42 Section 2 Auto-reversing connect to pin K, Set OpSw 14=c
	10	REV B*	To make PM42 Section 2 Auto-reversing, connect to pin L, Set OpSw 14=c
	11	RAIL B	Rail B connection to booster for PM42 Section 2
PM42 Section 3	12	RAIL A	Rail A connection to booster for PM42 Section 3
	13	REV A*	To make PM42 Section 3 Auto-reversing connect to pin P, Set OpSw 22=c
	14	REV B*	To make PM42 Section 3 Auto-reversing, connect to pin R, Set OpSw 22=c
	15	RAIL B	Rail B connection to booster for PM42 Section 3
PM42 Section 4	16	RAIL A	Rail A connection to booster for PM42 Section 4
	17	REV A*	To make PM42 Section 4 Auto-reversing connect to pin U, Set OpSw 30=c
	18	REV B*	To make PM42 Section 4 Auto-reversing, connect to pin V, Set OpSw 30=c
	19	RAIL B	Rail B connection to booster for PM42 Section 4
	20		Do Not Connect
	21		Do Not Connect
	22		Do Not Connect

* Note if Auto-reversing is not set up for any given PM42 section, do not connect REV A or REV B Pins

TABLE II: PM42 44-pin Connector
PC Board Non-Component Side Connections

	PIN	Name	Connect To
	A		Do Not Connect
	B	GROUND**	Connect to booster ground/case of DB100, DB150 , DCS100, etc.
	C	AC2	AC or DC 12-18V power supply
PM42 Section 1	D	RAIL A	Rail A connection to booster for PM42 Section 1
	E	TRK OUTPUT A	Connect to Rail A of track to be controlled by PM42 Section 1
	F	TRK OUTPUT B	Connect to Rail B of track to be controlled by PM42 Section 1
	H	RAIL B	Rail B connection to booster for PM42 Section 1
PM42 Section 2	J	RAIL A	Rail A connection to booster for PM42 Section 2
	K	TRK OUTPUT A	Connect to Rail A of track to be controlled by PM42 Section 2
	L	TRK OUTPUT B	Connect to Rail B of track to be controlled by PM42 Section 2
	M	RAIL B	Rail B connection to booster for PM42 Section 2
PM42 Section 3	N	RAIL A	Rail A connection to booster for PM42 Section 3
	P	TRK OUTPUT A	Connect to Rail A of track to be controlled by PM42 Section 3
	R	TRK OUTPUT B	Connect to Rail B of track to be controlled by PM42 Section 3
	S	RAIL B	Rail B connection to booster for PM42 Section 3
PM42 Section 4	T	RAIL A	Rail A connection to booster for PM42 Section 4
	U	TRK OUTPUT A	Connect to Rail A of track to be controlled by PM42 Section 4
	V	TRK OUTPUT B	Connect to Rail B of track to be controlled by PM42 Section 4
	W	RAIL B	Rail B connection to booster for PM42 Section 4
	X	GROUND**	Connect to booster ground/case
	Y		Do Not Connect
	Z		Do Not Connect

**Ground (Pin B or X) must be made to booster for correct PM42 operation.

Diagram 1: PM42 Wiring Examples

Example A
1 Booster - 4 Short Circuit Managers
Factory Settings (DEFAULT)

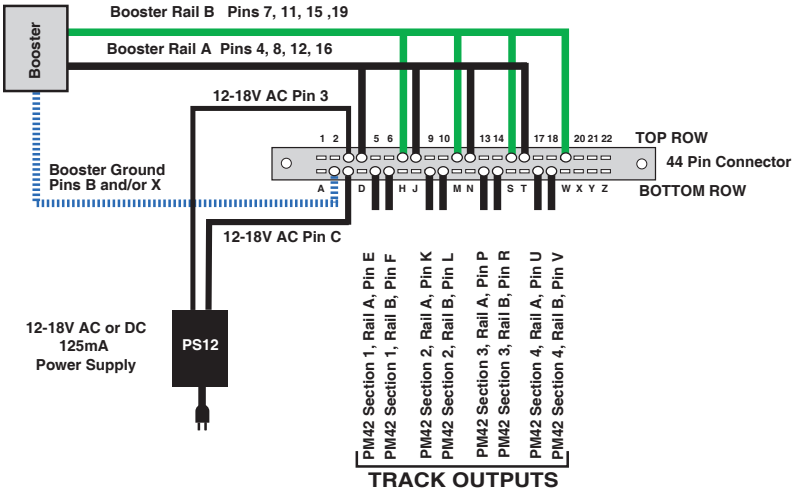

Example B
2 Boosters - 4 Short Circuit Managers

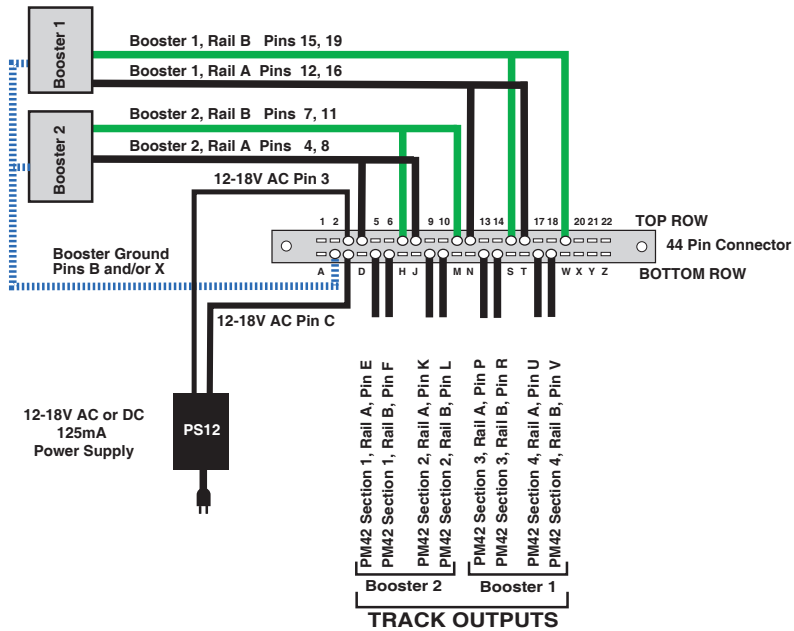

Diagram 2: PM42 Wiring Examples

Example C
1 Booster - 4 Auto-Reversing Section

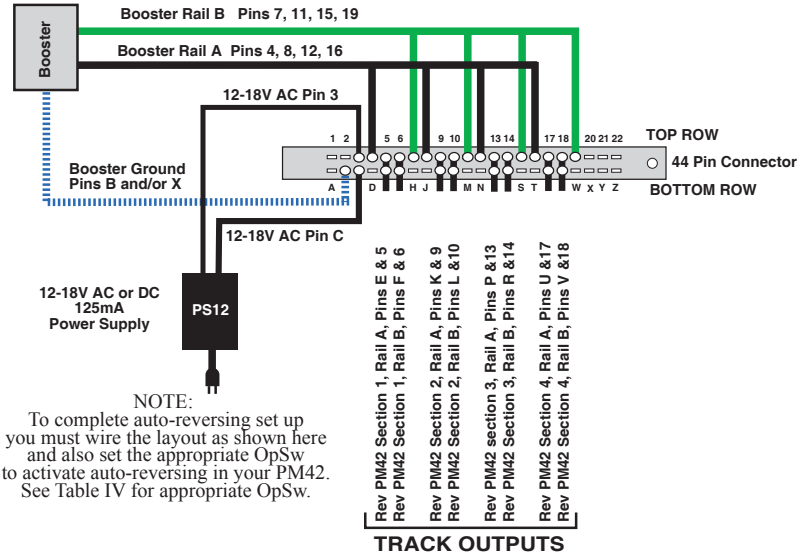

NOTE:
To complete auto-reversing set up you must wire the layout as shown here and also set the appropriate OpSw to activate auto-reversing in your PM42. See Table IV for appropriate OpSw.

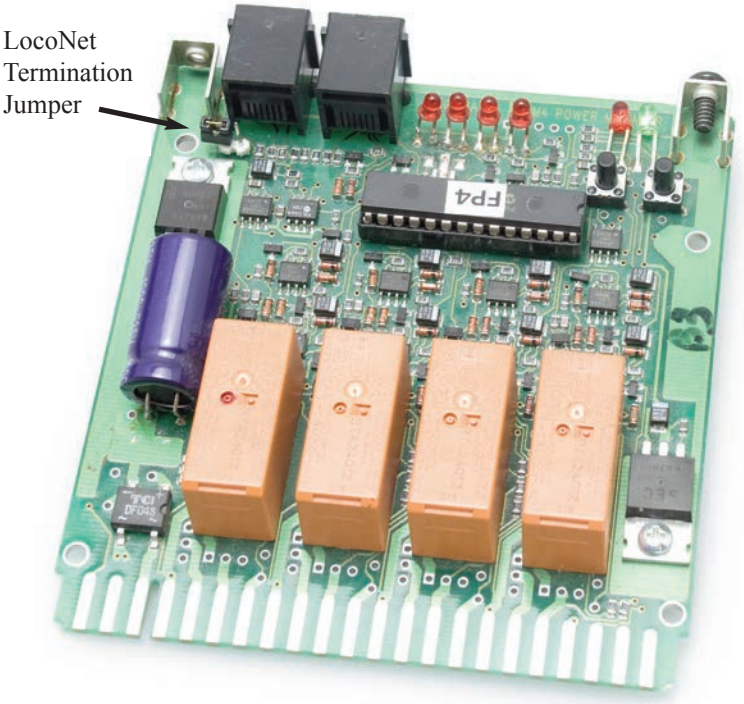

5.0 PM42 Option Switch (OpSw) Set Up

The PM42 OpSw settings are used to set up the PM42 for setting up the trip current, short circuit management (including sensitivity), and/or auto-reversing. Follow the steps outlined below to set up OpSws according to the **TABLES** below.

Connect a DT series throttle (with battery installed) to the LocoNet connector on your powered PM42 to read back and make changes to the PM42's option switches (OpSws).

The factory default setting on all PM42 OpSws is "thrown" or "t". This setting will operate each section of the PM42 as a short circuit manager.

To Change PM42 OpSw settings:

1. Enter option switch mode by pressing the "OPTION" button on the PM42 for about 1 second and then releasing it. The green "ID" LED and red "OPTION" LED will flash alternately to indicate that you have entered option switch mode.

2. Connect any Digitrax DT series throttle to the PM42's LocoNet connector. Note that because the throttle's switch control mode is used to change the PM42's OpSw settings, each time you change the PM42's option switch settings you will also send switch commands to the layout any time you are connected to LocoNet and the layout.

3. If the PM42 is connected to a working LocoNet (via a 6 conductor LocoNet cable), skip to step 4 since the LocoNet termination jumper is not needed. If the PM42 is not connected to a working LocoNet, move the LocoNet termination jumper so that it is across both pins. The LocoNet termination jumper is, located behind the RJ12 sockets on the PM42 board.

4. Follow the instructions for the throttle you are using to enter switch control mode on the throttle. Select the switch address that corresponds to the OpSw number you want to change. Press the "c" or "t" button to change the OpSw setting as desired.

5. When OpSw set up is complete, press the PM42's "OPTION" button and the unit will exit option switch mode. If you moved the LocoNet termination jumper in step 3 above, return it to its original position (leave it attached to one pin so that you don't lose the jumper).

5.1 PM42 Trip Current

The PM42 factory default for trip current is set at 3 amps. This is the current that all Digitrax boosters can provide briefly under fault conditions with adequate track wiring. A 3 amp trip current will work for most boosters and layouts. If you have many locomotives running or other large power draws in a sub-district or you need to use currents higher than 3 amps, you can modify the current threshold for all four sections of the PM42 to any value between 1.5 amps and 12 amps, in increments of approximately 1.5 amps. Simply change option switches 01, 02 and 09 according to **TABLE III** to adjust PM42's trip current for optimal operation on your layout.

TABLE III: PM42 Trip Current Setting OpSws

OpSw	**Setting**	**Setting**	**Setting**	**Setting**
OpSw 01 (OpSw 09 = t)	t	c	t	c
OpSw 02 (OpSw 09 = t)	t	t	c	c
Trip Current (approx.)	***3 amps***	***6 amps***	***9 amps***	***12 amps***
OpSw 09	c	c	c	c
Trip current (approx.)	***1.5 amps***	***4.5 amps***	***7.5 amps***	***10.5 amps***

5.2 Setting the Short Circuit Sensitivity of the PM42

TABLE IV: PM42 Short Circuit Sensitivity Settings

PM42 Section 1	**OpSw 03**	**OpSw 05**	**Short Circuit Detection Sensitivity**
	thrown	closed	Slow
	thrown	thrown	Standard (Default)
	closed	closed	Faster
	closed	thrown	Fastest
PM42 Section 2	**OpSw 11**	**OpSw 13**	**Short Circuit Detection Sensitivity**
	thrown	closed	Slow
	thrown	thrown	Standard (Default)
	closed	closed	Faster
	closed	thrown	Fastest
PM42 Section 3	**OpSw 19**	**OpSw 21**	**Short Circuit Detection Sensitivity**
	thrown	closed	Slow
	thrown	thrown	Standard (Default)
	closed	closed	Faster
	closed	thrown	Fastest
PM42 Section 4	**OpSw 27**	**OpSw 29**	**Short Circuit Detection Sensitivity**
	thrown	closed	Slow
	thrown	thrown	Standard (Default)
	closed	closed	Faster
	closed	thrown	Fastest

Slow short circuit detection is best for layouts using heavy lamp loads and/or slower boosters.

Standard short circuit detection works for most HO locos on most Digitrax layouts.

Faster short circuit detection can be used with most HO & N scale locos on most Digitrax layouts. Faster short circuit detection should be used with autoreversing sections of your PM42.

Fastest short circuit detection for use with decoders that are particularly sensitive to power interruptions, and should be the setting for autoreversing.

5.3 Setting the PM42 for Auto-Reversing Operation

Once you have wired one or more sections of the PM42 for auto-reversing according to the instructions in Section 4.0 of this manual, use TABLE V below to determine which OpSw you must set to enable auto-reversing in the PM42 section/s you want to use as auto-reversing.

We recommend that you set your short circuit detection sensitivity to the "Fastest" setting when using auto-reversing.

TABLE IV: PM42 Auto-Reversing Set UP Option Switches

PM42 Section 1	OpSw 06 = c	Connect Rail A, Pins E & 5, Connect Rail B, Pins F & 6 on 44-pin connector
PM42 Section 2	OpSw 14 = c	Connect Rail A, Pins K & 9, Connect Rail B, Pins l & 10 on 44-pin connector
PM42 Section 3	OpSw 22 = c	Connect Rail A, Pins P & 13 Cconnect Rail B, Pins R & 14 on 44-pin connector
PM42 Section 4	OpSw 30 = c	Connect Rail A, Pins U & 17, Connect Rail B, Pins V & 18 on 44-pin connector

6.0 Using your PM42 on LocoNet

The PM42 will operate with no connection to LocoNet. To put your PM42 on LocoNet, use the two LocoNet connectors on the PM42 to connect it to LocoNet using 6 conductor cables just like any other LocoNet device on your layout.

If connected to LocoNet, the PM42 sends information to the system as faults are detected, cleared, and when auto-reversing occurs. If you wish to report PM42 status information to LocoNet and attached devices or computers that can interpret these messages, you must set up a unique **board address** for each PM42.

6.1 Setting the PM42's board address:

1. Connect a Digitrax DT series throttle to the LocoNet port on your PM42.

2. If the PM42 is not connected to a working LocoNet (via a 6 conduc-

tor LocoNet cable), position the LocoNet termination jumper, located behind the RJ12 sockets, across both pins. If the PM42 is connected to a working LocoNet, you do not need to use the LocoNet termination jumper.

3. Press and hold the "ID" button behind the green LED for about 1 second. The green "ID" LED will blink when the button is released. This indicates that the PM42 is in board address setting mode.

4. Enter switch control mode on the throttle according to the throttle's instructions. Select the switch address that corresponds to the board address you want to assign to the PM42. Press the "c" button to issue a "closed" command. This will set the board address the same number as the switch address you selected. The green "ID" LED will change to steady green indicating PM42 Power ON and that board address setting mode is complete. Be sure to reconnect to LocoNet and return the LocoNet termination jumper to its original position.

5. To exit board address setting mode with no changes, press the "ID" button a second time and hold it for about 1 second. Be sure to reconnect to LocoNet and if you use the LocoNet termination jumper, move it back to its original position.

7.0 Troubleshooting

Short circuit is indicated when lights are turned on in locos or rolling stock.

Because turning on incandescent lamps creates a brief current spike that may be detected as a short circuit by the system, you need to decrease your short circuit detection sensitivity. See **Table IV** for appropriate settings for each PM42 section.

DCC locos do not resume operation immediately after short circuit shutdown.

1. Because of the differences in the amount of energy stored by different decoders, you may need to increase the sensitivity of your short circuit detection. See **Table IV** for appropriate settings for each PM42 section.
2. Set the decoder's CVs for Accel and Decel to 0. This will allow the decoders to start the loco moving immediately when power is restored to the track. Use your Digitrax throttle to simulate acceleration and deceleration instead.

8.0 Warranty and Repair Information

Digitrax gives a one year *"No Worries" Warranty* against manufacturing defects and accidental customer damage on all Digitrax products.

That's it! A simple, straightforward warranty with no tricky language!

Visit www.digitrax.com for complete warranty details and instructions for returning items for repair.

For complete warranty details see www.digitrax.com.

9.0 FCC Information

Radio or TV Interference: (this information is MANDATED by the FCC) This equipment has been tested and found to comply with the limits for a Class B digital device, pursuant to part 15 of the FCC rules. These limits are designed to provide reasonable protection against harmful interference when the equipment is operated in a residential environment. This equipment generates, uses and can radiate radio frequency energy and, if not installed and used in accordance with the instruction manual, may cause harmful interference to radio communications. However, there is no guarantee that interference will not occur in a particular installation. If this equipment does cause harmful interference to radio or television reception, which can be determined by turning the equipment off and on, the user is encouraged to try to correct the interference by one or more of the following measures:

-Reorient or relocate the receiving antenna.
-Increase the separation between the equipment and the receiver.
-Connect the equipment into an outlet on a circuit different form that to which the receiver is connected.
-Consult the dealer or an experienced radio/TV technician for help.

Note that any modifications to the equipment not expressly approved by Digitrax voids the user's authority to operate under and be in compliance with CFR 47 rules, as administered by the Federal Communication Commission. Digitrax believes any conscientiously installed equipment following guidelines in this manual would be unlikely to experience RFI problems.

PM42

Power Manager

Go Beyond DCC With Digitrax Complete Train Control

Main Station

Starter Sets
LocoNet®
Power Supplies

DUPLEX EQUIPPED Available

Your Digitrax LocoNet® Starter Set is just the beginning of an exciting trip! Pick the one that's right for you!

Super Chief xtra™

Super Empire Builder xtra™

Zephyr™

LocoNet® The Digitrax Difference

Locomotive Shops

Mobile Decoders
Function Decoders
SoundFX™ Decoders

More Fun For Everyone

Add More Boosters,
Advanced & Simple Throttles,
Power Supplies,
Universal Panels,
IR and/or Radio
for more trains and operators.

Maintenance Of Way

Make your layout more fun & simpler to operate!

Computer Controls

Computer Interface
Decoder Programmer
Sound Programmer

It All Adds Up To Complete Train Control

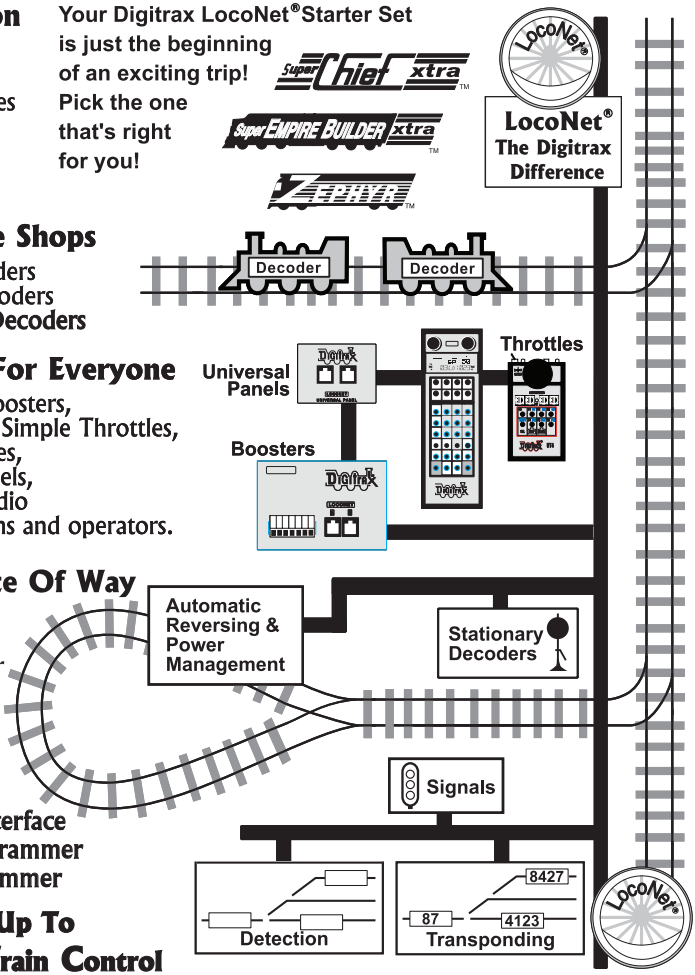

2443 Transmitter Road
Panama City, FL 32404
www.digitrax.com
T 850-872-9890
F 850-872-9557

Made in U.S.A.

CE

PM42

6 52667 03004 5

306-1001-0001